TO-247AC (HIGH VOLTAGE)

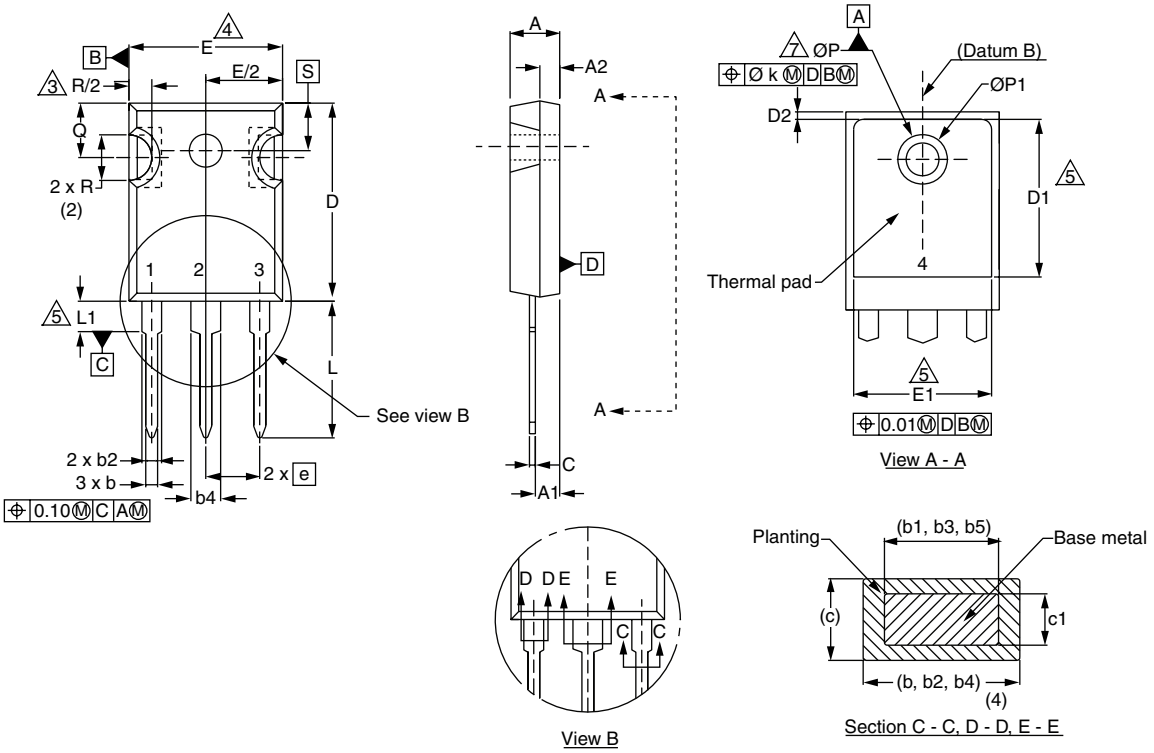

	MILLIMETERS		INCHES	
DIM.	MIN.	MAX.	MIN.	MAX.
A	4.65	5.31	0.183	0.209
A1	2.21	2.59	0.087	0.102
A2	1.50	2.49	0.059	0.098
b	0.99	1.40	0.039	0.055
b1	0.99	1.35	0.039	0.053
b2	1.65	2.39	0.065	0.094
b3	1.65	2.37	0.065	0.093
b4	2.59	3.43	0.102	0.135
b5	2.59	3.38	0.102	0.133
c	0.38	0.86	0.015	0.034
c1	0.38	0.76	0.015	0.030
D	19.71	20.70	0.776	0.815
D1	13.08	-	0.515	-

	MILLIMETERS		INCHES	
DIM.	MIN.	MAX.	MIN.	MAX.
D2	0.51	1.30	0.020	0.051
E	15.29	15.87	0.602	0.625
E1	13.72	-	0.540	-
e	5.46 BSC		0.215 BSC	
Ø k	0.254		0.010	
L	14.20	16.10	0.559	0.634
L1	3.71	4.29	0.146	0.169
N	7.62 BSC		0.300 BSC	
Ø P	3.56	3.66	0.140	0.144
Ø P1	-	7.39	-	0.291
Q	5.31	5.69	0.209	0.224
R	4.52	5.49	0.178	0.216
S	5.51 BSC		0.217 BSC	

ECN: S-81920-Rev. A, 15-Sep-08
DWG: 5971

Notes

1. Dimensioning and tolerancing per ASME Y14.5M-1994.
2. Contour of slot optional.
3. Dimension D and E do not include mold flash. Mold flash shall not exceed 0.127 mm (0.005") per side. These dimensions are measured at the outermost extremes of the plastic body.
4. Thermal pad contour optional with dimensions D1 and E1.
5. Lead finish uncontrolled in L1.
6. Ø P to have a maximum draft angle of 1.5 to the top of the part with a maximum hole diameter of 3.91 mm (0.154").
7. Outline conforms to JEDEC outline TO-247 with exception of dimension c.